# Steps for solving Kirchhoff's Law problems

1. Assume different currents on each different wire and their directions.
2. On a joint, where all different currents intersect, write a current balance:

$$I_n = I_{out}$$

3. Assume a path direction to follow for each loop. You will follow this path in the assumed direction to account for each voltage change across the loop.
4. Choose an arbitrary point in the first loop in your assumed path direction, accounting for all the differences (batteries and resistors) until you complete the loop and reach the same point. Set the voltage difference to zero. Usually, there are two loops.
   - For the batteries: Each voltage value will be taken directly. Follow your assumed path. The exit pole's sign will be the sign for the batteries voltage.
   - For the resistors: The voltage difference across the resistor is V = IR. If the path direction is in the current, subtract IR. If the path direction is opposite to the current's direction, then add I*R.
5. You now have three equations, one from the joint (step two) and two from voltages around loops (step four). Solve for the unknowns with those three equations with three unknowns.
6. Evaluate your results:
   - If the current value comes to a negative number, that shows the assumed direction for that current in step one was inverse of the positive direction.
   - Plug in the numerical values on one of your equations to verify your results.

## Example:

What is the current through the 10 Ω resistor in the figure?
Please specify the direction of the current.

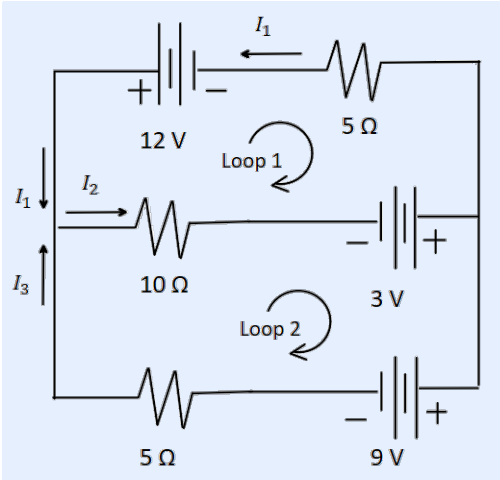


$$I_n = I_{out}$$
$$I_1 = I_2 + I_3$$

$$Loop\ 1:$$
$$-12 + 5I_1 - 3 + 10I_2 = 0$$
$$5I_1 + 10I_2 = 15 \qquad (i)$$

$$Loop\ 2:$$
$$-10I_2 + 3 - 9 + 5I_3 = 0$$
$$-10I_2 - 6 + 5I_1 - 5I_2 = 0$$
$$5I_1 - 15I_2 = 6 \qquad (ii)$$

Solving the two equations (i) and (ii)

$$5I_1 + 10I_2 = 15$$
$$5I_1 - 15I_2 = 6$$
$$25I_2 = 9$$

$$I_2 = \frac{9}{25} = 0.36\ A$$

Having a positive means that our assumption of the direction of $I_2$ was correct.


**Student Learning Centre**

**Call:** 905.721.8668 ext. 6578
**Email:** studentlearning@ontariotechu.ca
**Website:** ontariotechu.ca/studentlearning

**Downtown Oshawa campus location:** Charles Hall
**North Oshawa campus location:** Shawenjigewining Hall

OntarioTech UNIVERSITY